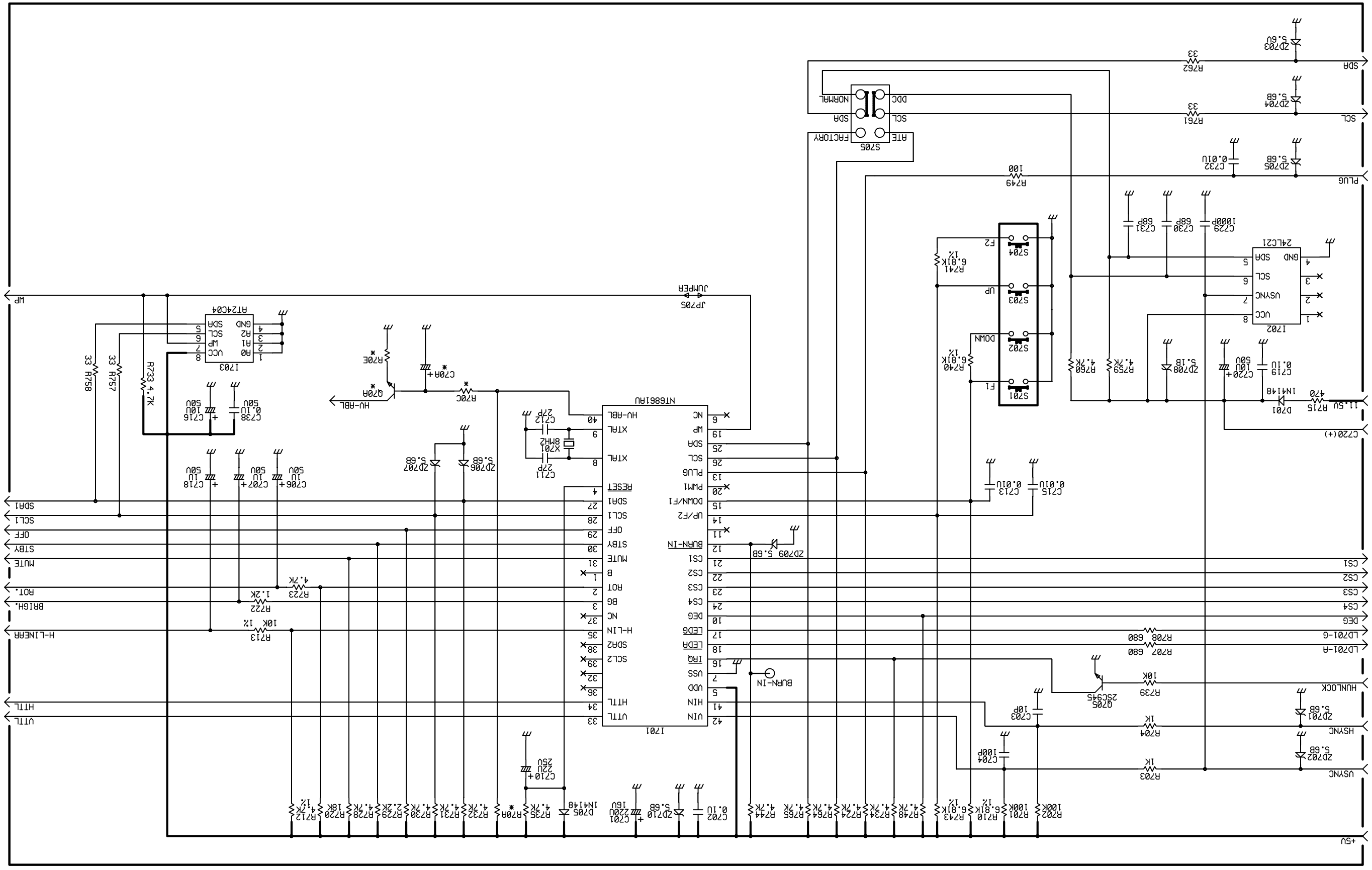
+5V
VSYNC
HSYNC
HULLOCK
LD701-A
LD701-G
DEG
CS4
CS3
CS2
CS1
PLUG
SCL
SDA
VTTL
HTTL
MUTE
STBY
OFF
SDA1
SCL1
BRIGH.
ROT.
H-LINEAR
BURN-IN
I701
NT6861AU
I702
24LC21
I703
AT24C04
S201
S202
S203
S204
S205
FACTORY
NORMAL
JP705
JUMPER
Q205
2SC945
Q206
HU-RBL